TIBO Curved Spout 839 110IA Standard Single Lever Basin Mixer

INSTALLATION INSTRUCTION

※ACCESSORIES CHECKING

LIST OF THE STANDARD ACCESSORIES:
Please double-check the accessory list hereinafter and contact our company or our distributor for any unconformity.
Remarks:
1.Without affecting their performancing, accessories may be changed without further notice;
2.Drawings for reference only, product size & shape refer to actual.

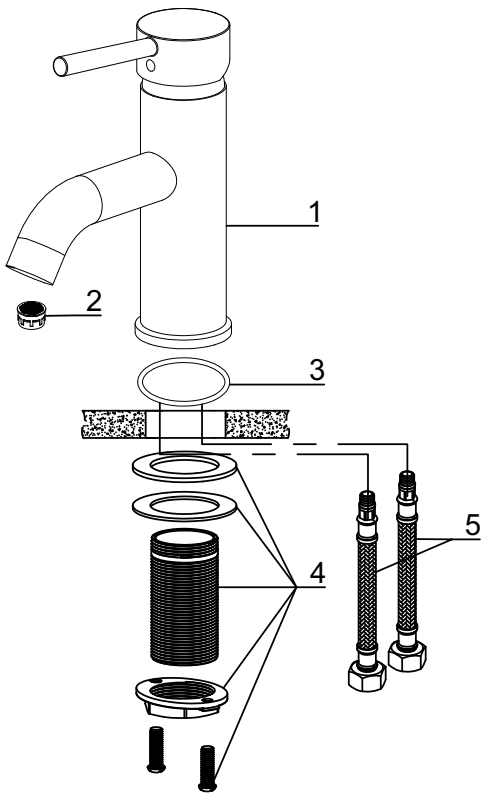

Accessories list		
No.	Name	Qty
1	Main body	1
2	Aerator assembly	1
3	Fixed assembly	1
4	Inlet hose	2

※Installation Instructions

☆ Do not disassemble the main body, as it has been installed & commissioned correctly & precisely before leaving the factory;
☆ To avoid the faucet from jamming, do flush the water pipe before installation;
☆ After installation, make sure every joint safely sealed & no leaking;
☆ Using condition: Working pressure at 0.05-1.0MPa(including cold & hot water pressure), with applicable water temperature: 4°C-90°C;
☆ Make sure to connect the hot/cold inlet pipe correctly, if standing in front, hot water pipe connecting to the left & cold water pipe connecting to the right.

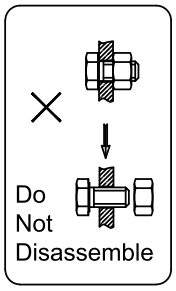

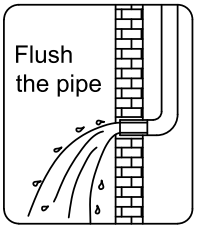

※ Installation Procedures

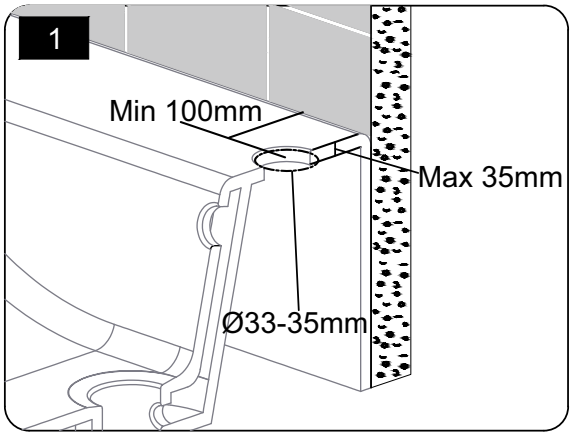

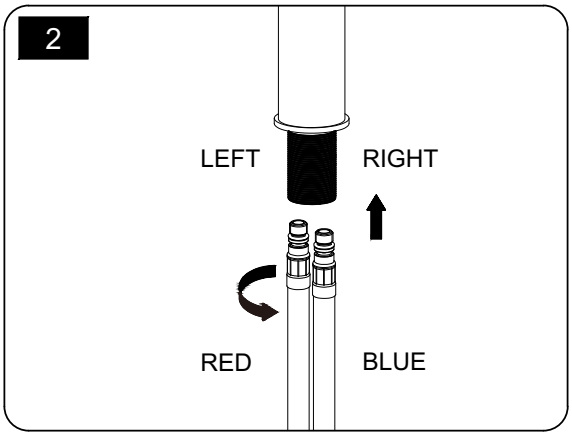

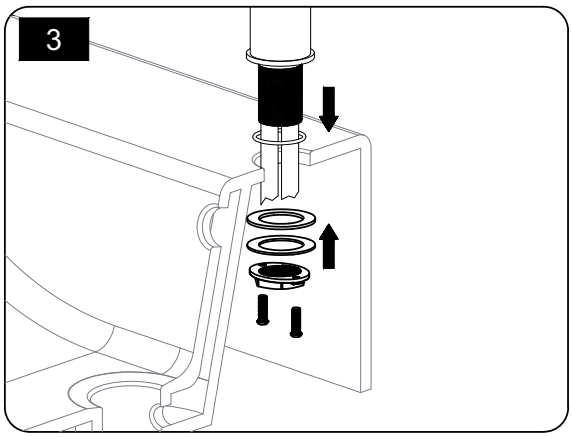

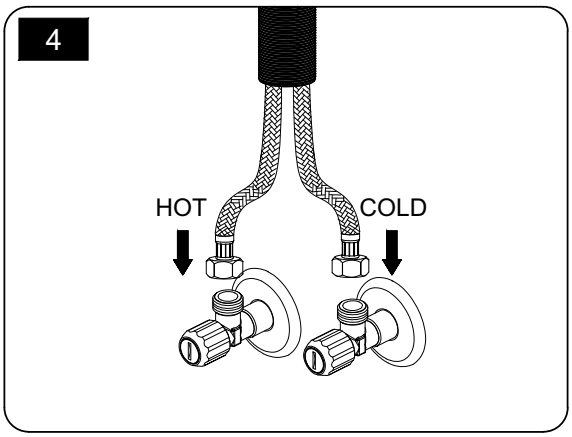

※Usage

☆How to operate the handle

1.Raise the handle up for opening water, push it down for close;
2.Turn the handle to the left to increase hot water flow for higher water temperature, and lower water temperature by operating reversely.

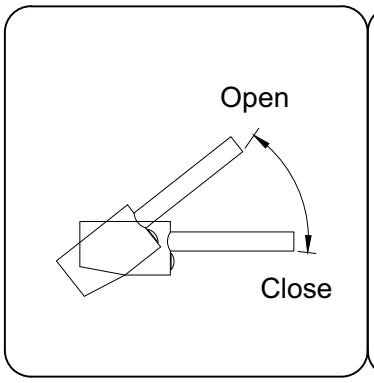

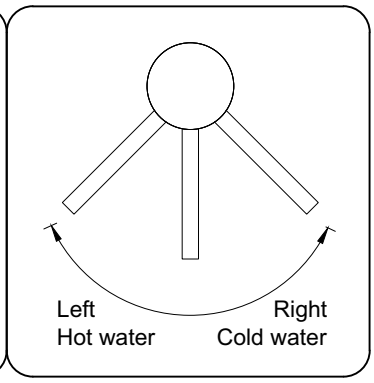

※ Cleaning & Maintenance

☆ To keep the product clean & shining, follow as below:
1.Flush with clean water & dry with soft cloth only;
2.If any dirt, clean with soft liquid or transparent glass detergent;
3.Do not use any scrubbing detergent, polisher, sane-cloth, paper tissue or scraper;
4.Do not use acid detergent, insoluble grain-like detergent or soap;
5.Circumrotate the aerator o ffand clean it when necessary.

