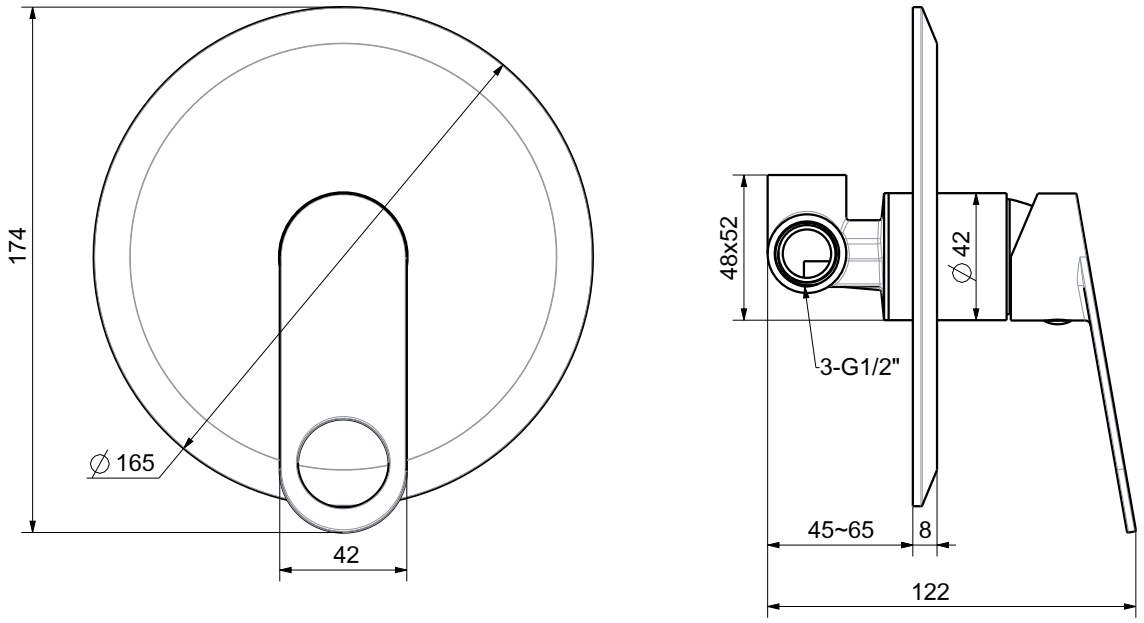
174
∅165
42
48x52
∅42
3-G1/2"
45~65
8
122